REV.	ECN NO.	DATE	SIGN	DESCRIPTION
C	C201549	2020/10/20	Vicky	C X4
D	C210561	2021/04/19	Vicky	D X2
E	C221877	2022/12/13	Ruru	E X1

C MSSP-XXBFFB-SL7002

XX: No. Of Pin

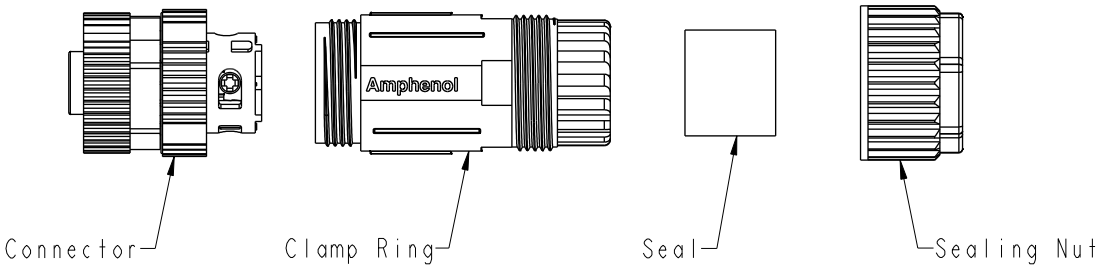

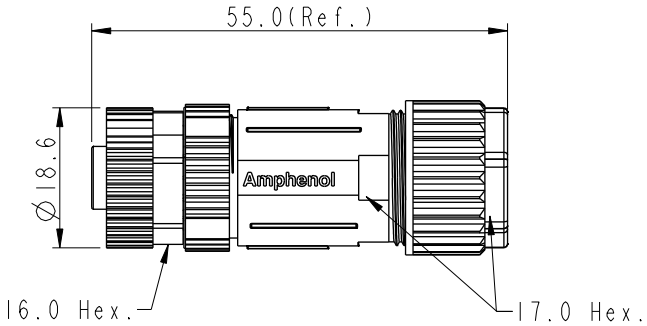

C D

Note:
* RoHS Compliant
* QC Important Dimension
E * Waterproof rate: IP67, mated
* Connector
B Housing: Thermoplastic, Black
Pin: Copper alloy, Gold plated
Extension Nut: Thermoplastic, Black
Nut: Thermoplastic, Black
O-Ring: Rubber, Gray
* Clamp Ring: Thermoplastic, Black
* Sealing Nut: Thermoplastic, Black
* Seal: Rubber, Gray, OD:Ø8.0mm~Ø10.0mm
* One set unassembled in one pe bag

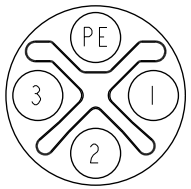

3+PE

Pin Assignments
Front View

UNIT:mm

TOLERANCE
.X ±0.25
.XX ±0.1
.XXX ±0.05
ANGLES ±1°

TITLE: N SEN, M12 S -PLASTIC, SCREW CABLE W/O SR, F, F, FI SCREWIN C D

SCALE 1:1 | SIZE A4 | SHEET 1 OF 1

REV. E | WC-REV. A.2 | QC: Inspection item

Amphenol LTW
安費諾亮泰企業股份有限公司

ITEM NO	DRAWN BY Feng_Li	DATE 2018-02-01
DWG NO C MSSP-XXBFFB-SL7002	CHECKED BY Mafei	DATE 2018-02-01
CUSTOMER ALTW	APPROVED BY Jerry	DATE 2018-02-01

WI0814-03-RW01A2

THIS DOCUMENT IS SUBJECT TO CHANGE WITHOUT NOTICE. IT IS CONFIDENTIAL AND A PROPERTY OF Amphenol LTW. DISCLOSURE TO THIRD PARTY HAS TO BE AUTHORIZED BY Amphenol LTW.