Jun.1.2024 Copyright 2024 HIROSE ELECTRIC CO., LTD. All Rights Reserved.
In case of consideration for using Automotive equipment / device which demand high reliability, kindly contact our sales window correspondents.

	COUNT	DESCRIPTION OF REVISIONS	BY	CHKD	DATE		COUNT	DESCRIPTION OF REVISIONS	BY	CHKD	DATE
△					. .	△					. .
△					. .	△					. .
△					. .	△					. .

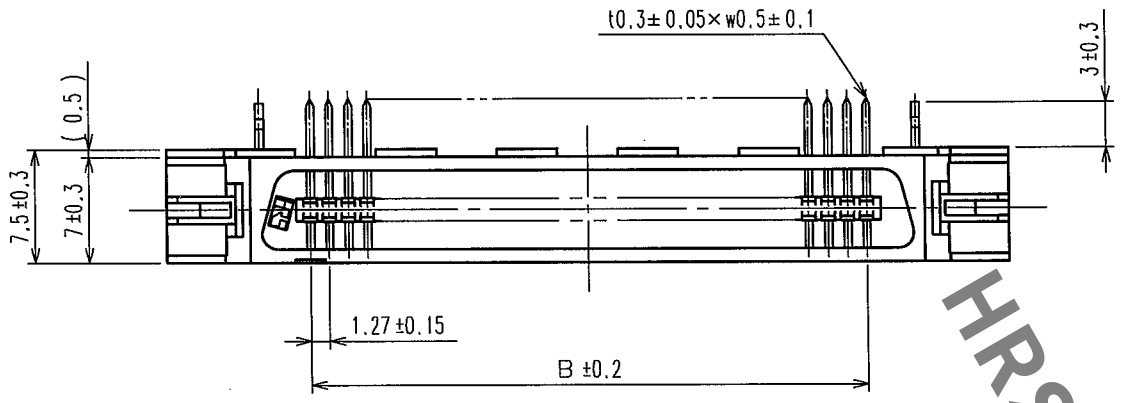

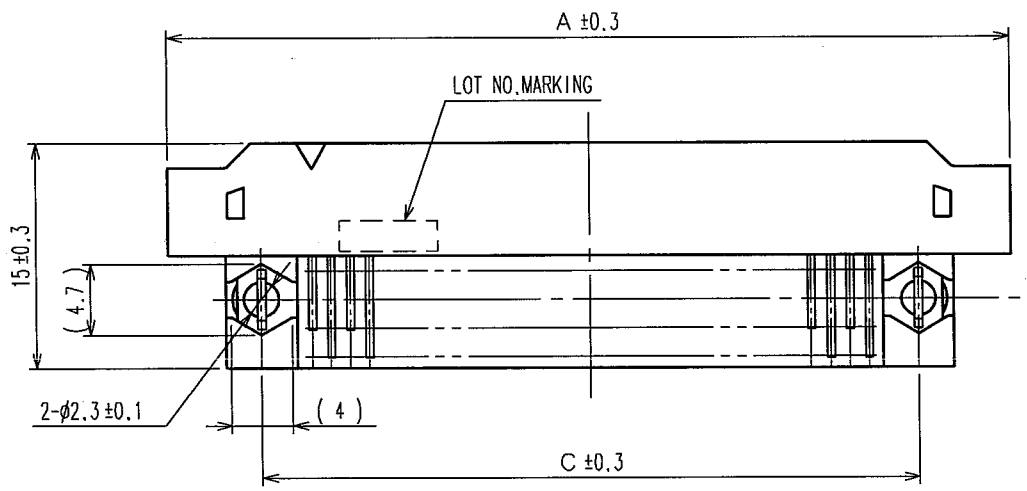

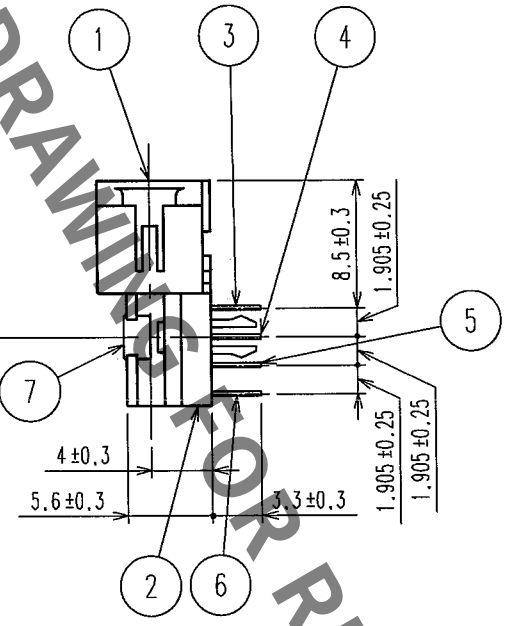

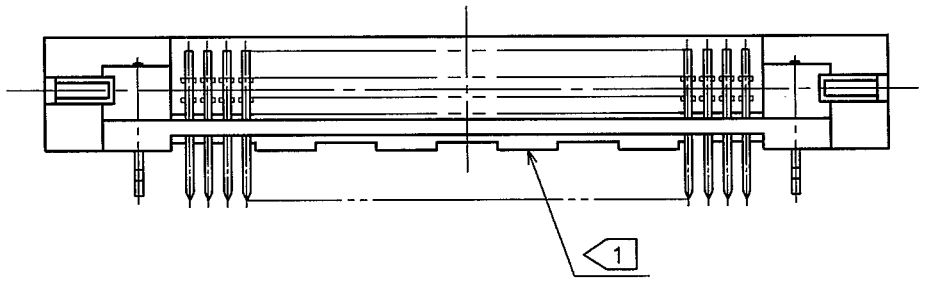

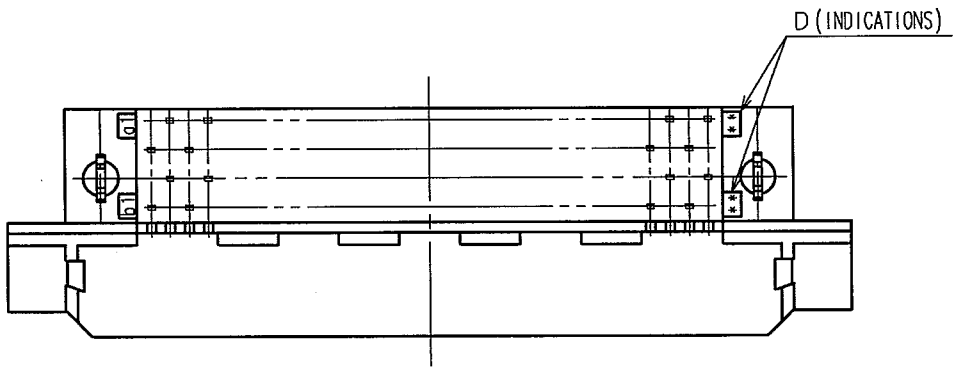

RECOMMENDEND PC BOARD HOLE PATTERN (MOUNTING SIDE)

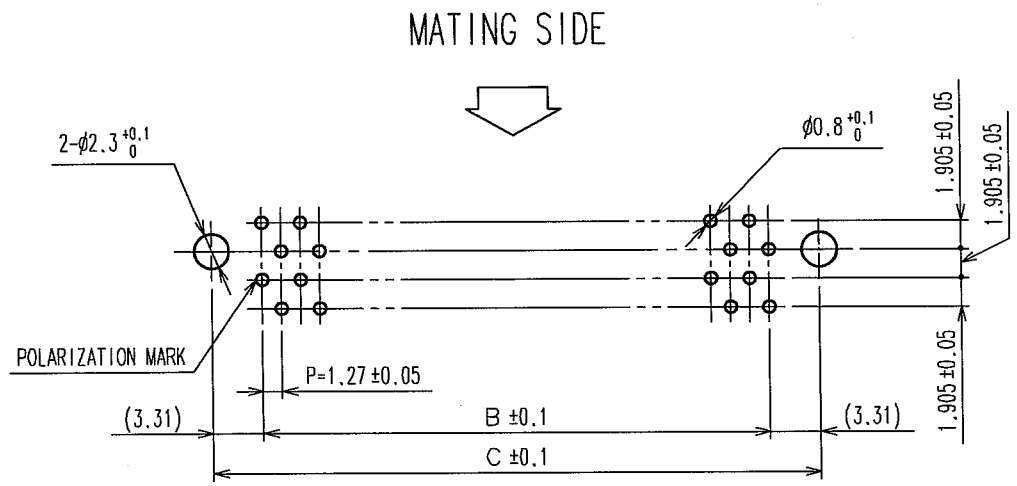

PART No.	CODE No.	3	A	B	C	D
FX2B-20P-1.27DSL(71)	CL572-0751-8-71	20	30.33	11.43	18.05	10
FX2B-32P-1.27DSL(71)	CL572-0752-0-71	32	37.95	19.05	25.67	16
FX2B-40P-1.27DSL(71)	CL572-0753-3-71	40	43.03	24.13	30.75	20
FX2B-52P-1.27DSL(71)	CL572-0754-6-71	52	50.65	31.75	38.37	26
FX2B-60P-1.27DSL(71)	CL572-0755-9-71	60	55.73	36.83	43.45	30
FX2B-68P-1.27DSL(71)	CL572-0756-1-71	68	60.81	41.91	48.53	34
FX2B-80P-1.27DSL(71)	CL572-0757-4-71	80	68.43	49.53	56.15	40
FX2B-100P-1.27DSL(71)	CL572-0758-7-71	100	81.13	62.23	68.85	50

NOTES 1 STANDOFF DIFFERS ACCORDING TO PRODUCTS.
2. THE DIMENSIONS IN PARENTHESES ARE FOR REFERENCE.
3 NUMBER OF PIN.

FOR REFERENCE

NO.	MATERIAL	FINISH, REMARKS
7	PHOSPHOR BRONZE	TIN-PLATING
1, 2	POLYAMIDE	BLACK UL94V-0

NO.	MATERIAL	FINISH, REMARKS
3~6	PHOSPHOR BRONZE	CONTACT AREA:GOLD 0.2μm min DIP AREA:TIN-PLATING 2μm min UNDER PLATING:NICKEL 2μm min

CODE NO.(OLD)	DRAWN	DESIGNED	CHECKED	APPROVED	RELEASED
CL	I.OKAYAMA 04.06.02	K.NAKAMURA 04.06.02	H.OKAWA 04.06.14	H.OKAWA 04.06.14	

SCALE FREE
UNITS mm

DRAWING NO. EDC3-082284-21

HRS HIROSE ELECTRIC CO.,LTD.

PART NO. FX2B-※※P-1.27DSL(71)

CODE NO. CL572

1/1

FORM NO.233

TO
PCK