May.1.2024 Copyright 2024 HIROSE ELECTRIC CO., LTD. All Rights Reserved.
In case of consideration for using Automotive equipment / device which demand high reliability, kindly contact our sales window correspondents.

	COUNT	DESCRIPTION OF REVISIONS	BY	CHKD	DATE		COUNT	DESCRIPTION OF REVISIONS	BY	CHKD	DATE
△					. .	△					. .
△					. .	△					. .
△					. .	△					. .

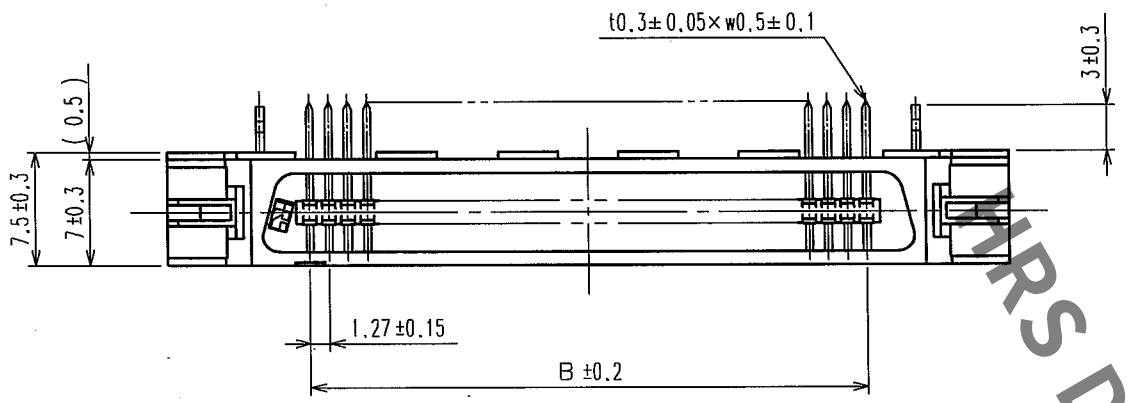

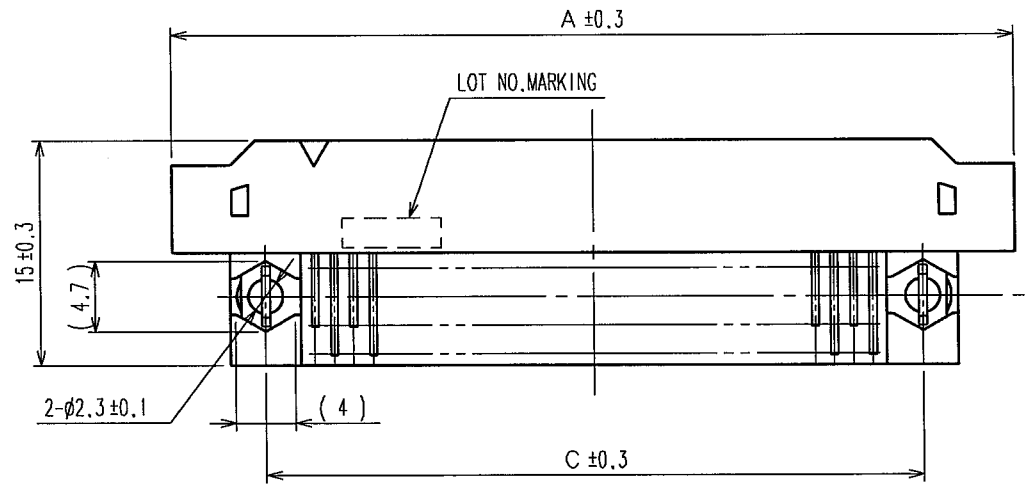

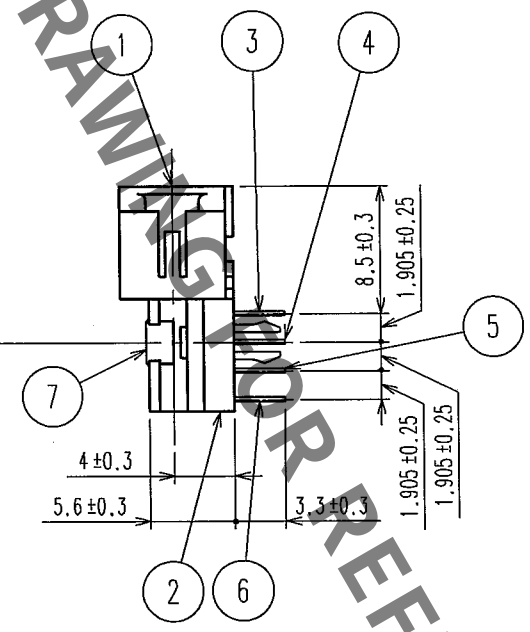

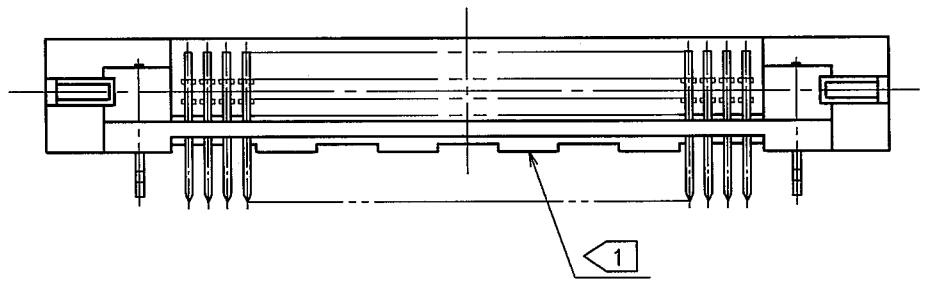

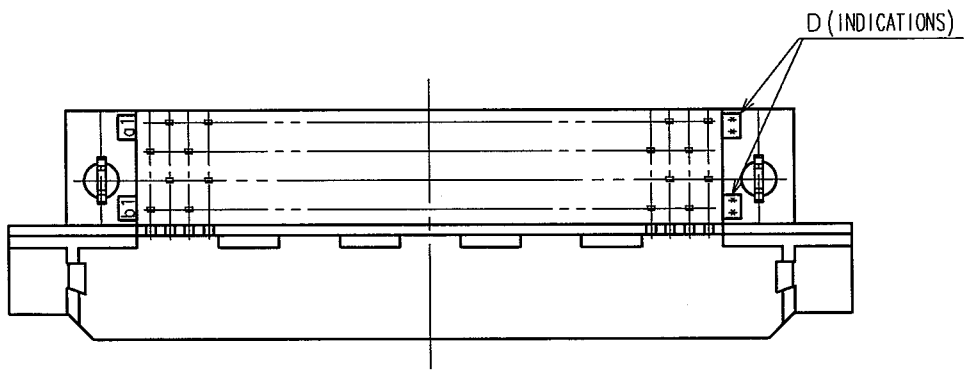

RECOMMENDEND PC BOARD HOLE PATTERN (MOUNTING SIDE)

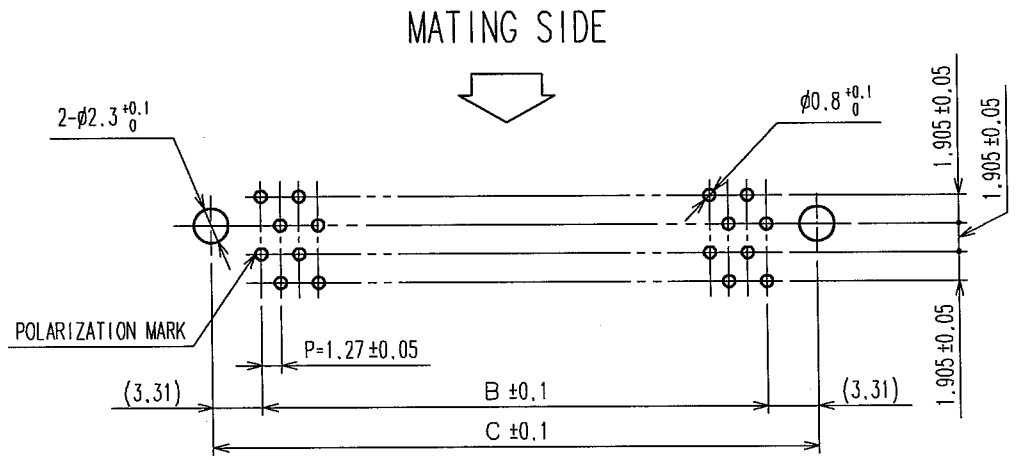

PART No.	CODE No.	2	A	B	C	D
FX2B-20PA-1.27DSL(71)	CL572-0771-5-71	20	30.33	11.43	18.05	10
FX2B-32PA-1.27DSL(71)	CL572-0772-8-71	32	37.95	19.05	25.67	16
FX2B-40PA-1.27DSL(71)	CL572-0773-0-71	40	43.03	24.13	30.75	20
FX2B-52PA-1.27DSL(71)	CL572-0774-3-71	52	50.65	31.75	38.37	26
FX2B-60PA-1.27DSL(71)	CL572-0775-6-71	60	55.73	36.83	43.45	30
FX2B-68PA-1.27DSL(71)	CL572-0776-9-71	68	60.81	41.91	48.53	34
FX2B-80PA-1.27DSL(71)	CL572-0777-1-71	80	68.43	49.53	56.15	40
FX2B-100PA-1.27DSL(71)	CL572-0778-4-71	100	81.13	62.23	68.85	50

NOTES 1 STANDOFF DIFFERS ACCORDING TO PRODUCTS.
2 NUMBER OF PIN.
3. THE DIMENSIONS IN PARENTHESES ARE FOR REFERENCE.

NO.	MATERIAL	FINISH, REMARKS
7	PHOSPHOR BRONZE	TIN-PLATING
1,2	POLYAMIDE	BLACK UL94V-0
3~6	BRASS	CONTACT AREA:GOLD FLASH DIP AREA:TIN-PLATING 2μm min UNDER PLATING:NICKEL 1μm min

CODE NO.(OLD)	DRAWN	DESIGNED	CHECKED	APPROVED	RELEASED
CL	I.OKAYAMA 04.06.02	K.NAKAMURA 04.06.02	H.OKAWA 04.06.14	H.OKAWA 04.06.14	

SCALE FREE
UNITS mm
DRAWING NO. EDC3-151041-21
HRS HIROSE ELECTRIC CO.,LTD.
PART NO. FX2B-※※PA-1.27DSL(71)
CODE NO. CL572
1/1
FORM NO.233

TO
PCK

HRS DRAWING FOR REFERENCE